SL716-14K
7’ x 16’, 14,000 lb. Heavy Duty Tandem Axle Dump Trailer

Standard Features

- Over Center Spreader Latch
- Spring Latch Gate Holdbacks
- 6” Scissor Hoist – Power Up / Power Down
- Corner Located D-Rings
- Stake Pockets
- Adjustable Coupler
- Aluminum Toolbox
- 110V Battery Charger
- 10W Solar Panel
- PPG DTM 2 Part Epoxy Paint
- Fully Enclosed Wiring
- Rear Step
- HSS Structural Tubing
- Engineered Sill Design

*Dealer Specific Options

Specifications

Axle:	(2) 7,000 lb Lippert Spring	**Floor & Wall:**	10ga Floor / 12ga Wall
Hoist:	Scissor Hoist 6” Bore X 20” Stroke 14 Ton	**Frame:**	6 X 2 HSS
Jack:	7,000 lb, Bolted, Top wind, Pull Pin Drop Leg	**Lights:**	LED
Ramp:	(2) Galvanized Steel 4,000 lb Midspan Ramps (65 lbs Each)	**Electric Plug:**	Cold Weather 7 Wire RV
Wheels:	235/80R16 E Steel	**Safety Chains:**	16,200 lb 5/16” w/Clevis Slip Hook
Tailgate:	Steel Barn Door w/ Over Centre Latch	**Paint Specs:**	PPG 2-Part Epoxy DTM
Coupler:	21,000 lb. Demco Adjustable	**Dump Angle:**	50°

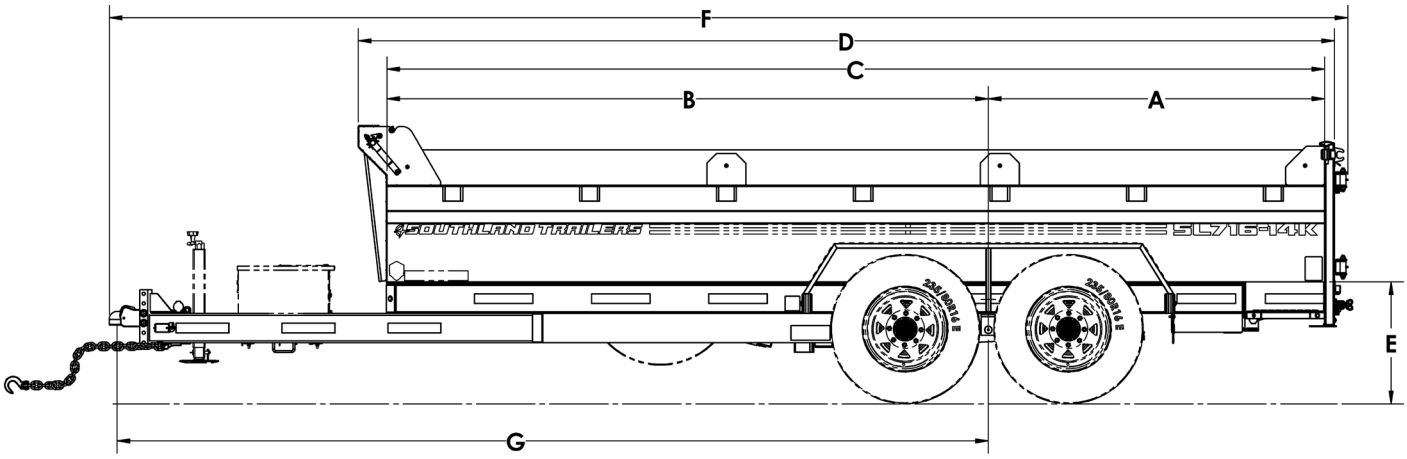

Dimensions

Model	A	B	C	D	E	F	G	Box Width
SL716-14K	68 7/8”	123 1/8”	192”	199 7/8”	25”	253 9/16”	178 3/8”	82 1/2”

Model	Description	Net Weight	GVWR	Payload Cap.
SL716-14K	7’ x 14’ 16,000 lb. Tandem Axle Black/Charcoal	4,037 lbs	15,400 lbs	11,363 lbs

THE CANADIAN WELDING BUREAU

SOUTHLAND TRAILERS

Specs are subject to change without notice. Please contact Southland Trailers Product Specialist for price confirmation on all Products. - Revised September 2026

SL716-16K
7’ x 16’, 16,000 lb.
Tandem Axle Dump Trailer

Standard Features

- Stake Pockets
- Scissor Hoist – Power Up / Power Down
- Adjustable Coupler
- Aluminum Toolbox
- 110V Battery Charger
- 10W Solar Panel
- PPG DTM 2 Part Epoxy Paint
- Fully Enclosed Wiring
- HSS Structural Tubing
- Engineered Sill Design
- HD Welded Front Step
- Spare Tire*
- Aluminum Slide in Ramps*
- Roll Up Tarp*
- Rear Drop Down Stabilizer Jacks*
- 8”Side Boards*

*Dealer Specific Options

Specifications

Axle:	(2) 8,000 lb Lippert Multi-Leaf Spring w/Equalizer	**Floor & Wall:**	10ga Floor / 10ga Wall
Hoist:	Scissor Hoist 6” Bore X 20” Stroke 14 Ton	**Frame:**	6 X 2 HSS
Jack:	7,000 lb, Bolted, Top wind, Pull Pin Drop Leg	**Lights:**	L.E.D. DOT Stop, Tail, Turn & Clearance
Ramp:	(2) Aluminum 4,500 lb Midspan Ramps (34 lbs Each)	**Electric Plug:**	Cold Weather 7 Wire RV Plug
Wheels:	235/85R16 F Steel	**Safety Chains:**	16,200 lb 5/16” w/Clevis Slip Hook
Tailgate:	Steel 3-Way Barn/Spreader	**Paint Specs:**	PPG 2-Part Epoxy DTM
Coupler:	21,000 lb Demco Adjustable	**Dump Angle:**	50°
Brakes:	Electric		

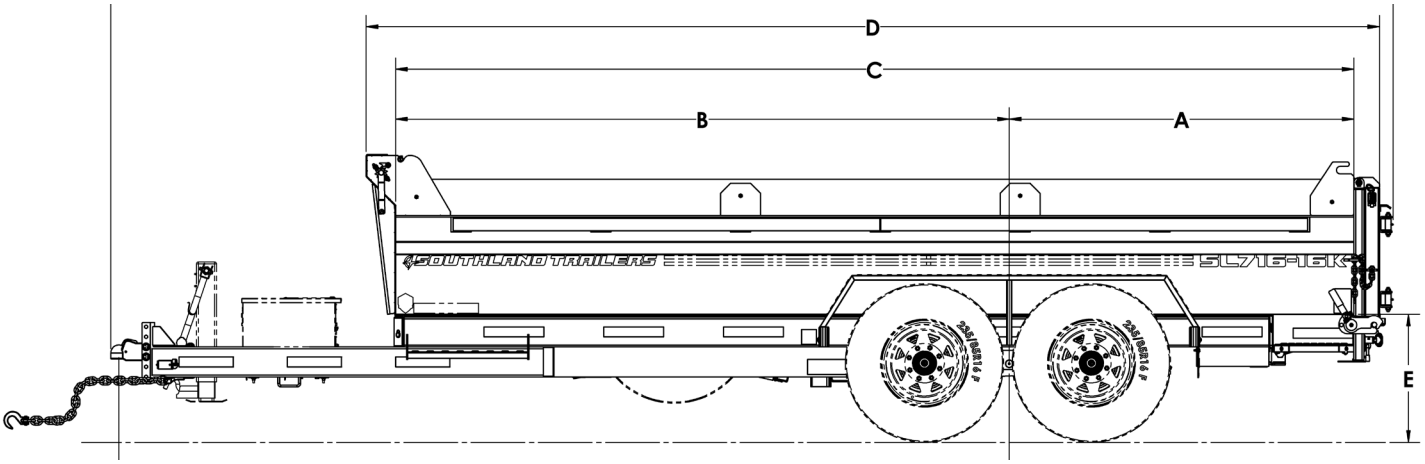

Dimensions

Model	A	B	C	D	E	F	G	Box Width
SL716-16K	69”	123”	192”	203”	25 5/8”	256 7/8”	178 3/8”	82”

Model	Description	Net Weight	GVWR	Payload Cap.
SL716-16K	7’ x 16’ 16,000 lb. Tandem Axle Black/Charcoal	4,563 lb.	17,420 lb.	12,857 lb.

Specs are subject to change without notice. Please contact Southland Trailers Product Specialist for price confirmation on all Products. - Revised September 2026

SL716-16KHD
7’ x 16’, 16,000 lb. Heavy Duty Tandem Axle Dump Trailer

Standard Features

- Stake Pockets
- HSS structural Tubing
- Scissor Hoist
- Engineered Sill Design
- Adjustable Coupler
- Spare Tire
- Aluminum Toolbox
- Aluminum Slide-In Ramps
- 110V Battery Charger
- Roll-Up Tarp
- 10W Solar Panel
- Rear Drop Down Stabilizer Jacks
- PPG DTM 2 Part Epoxy Paint
- 8” Side Boards
- Fully Enclosed Wiring
- HD Welded Front Step

*Dealer Specific Options

Specifications

Axle:	(2) 8,000 lb Lippert Spring	**Floor & Wall:**	3/16” Floor / 10ga Wall
Hoist:	Scissor Hoist 6” Bore X 20” Stroke 14 Ton	**Frame:**	6 X 2 HSS
Jack:	8,000 lb, Bolted, Hydraulic	**Lights:**	LED
Ramp:	(2)Galvanized Steel 4,500 lb Midspan Ramps (65 lbs Each)	**Electric Plug:**	Cold Weather 7 Wire RV
Wheels:	235/85R16 G Steel	**Safety Chains:**	16,200 lb 5/16” w/Clevis Slip Hook
Tailgate:	Steel 3-Way Barn/Spreader	**Paint Specs:**	PPG 2-Part Epoxy DTM
Coupler:	21,000 lb Demco Adjustable	**Dump Angle:**	50°

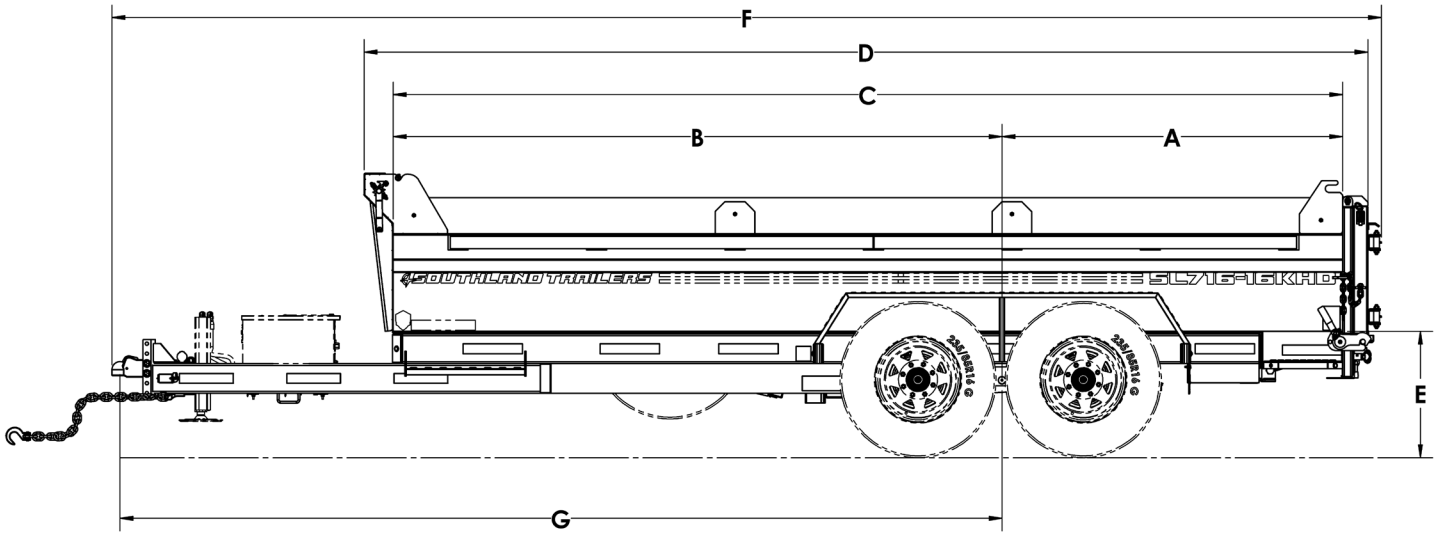

Dimensions

Model	A	B	C	D	E	F	G	Box Width
SL716-16KHD	68 7/8”	123 1/8”	192”	203“	25 9/16”	256 3/4”	178 3/8”	82 1/2”

Model	Description	Net Weight	GVWR	Payload Cap.
SL716-16KHD	7’ x 14’ 16,000 lb. Tandem Axle Black/Charcoal	4,812 lb.	17,420 lb.	12,608 lb.

THE CANADIAN WELDING BUREAU

SOUTHLAND TRAILERS

Specs are subject to change without notice. Please contact Southland Trailers Product Specialist for price confirmation on all Products. - Revised September 2026